DS-026

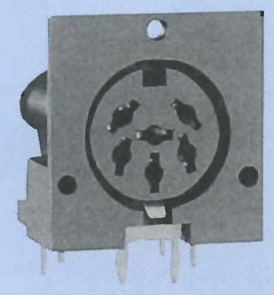

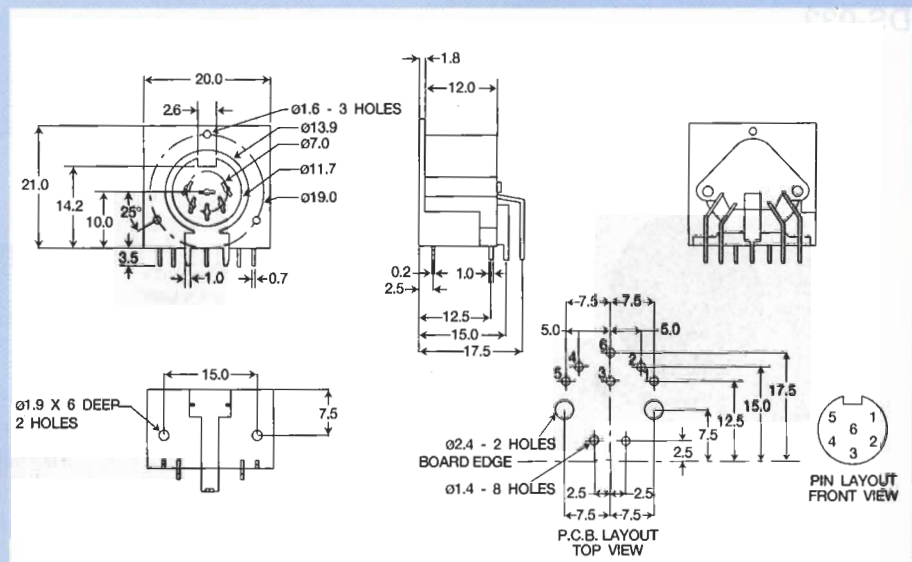

DS-027

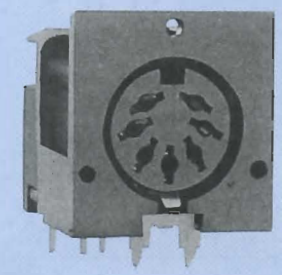

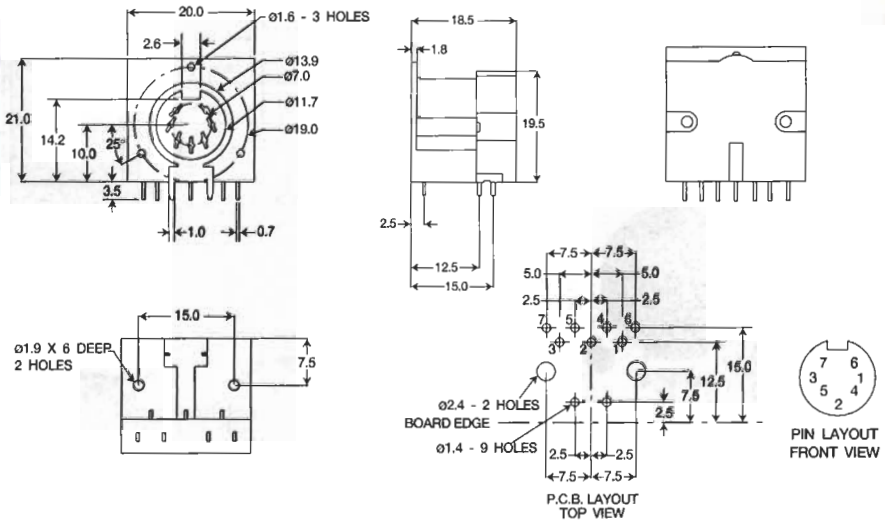

DS-028

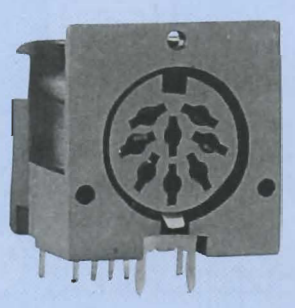

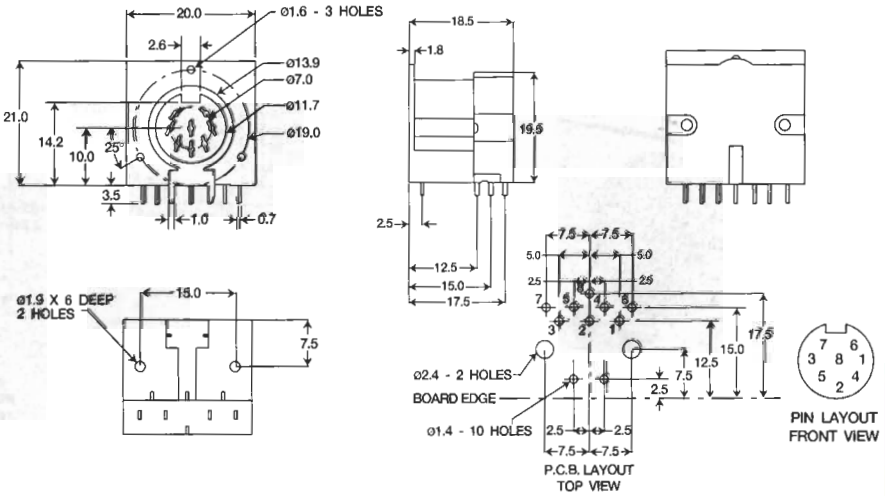

Specifications subject to change without notice. Dimensions in mm.
Mating plugs located on page 289.

Distributed by Electro-Stock, Inc. sales@electrostock.com
630-682-1542 Fax 630-682-1562 http://www.electrostock.com

PDI® Power Dynamics, Inc.